WRK39

PRODUCT DATA SHEET

saysu® Outdoor Fitness

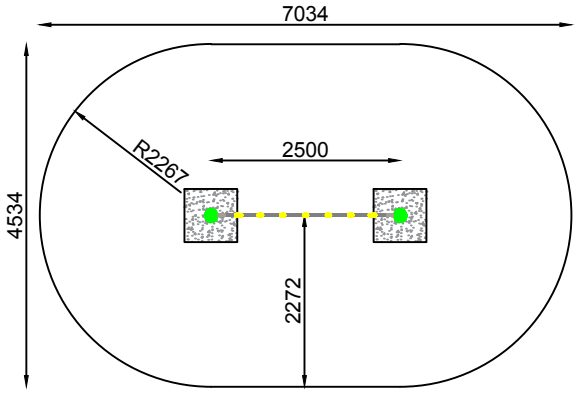

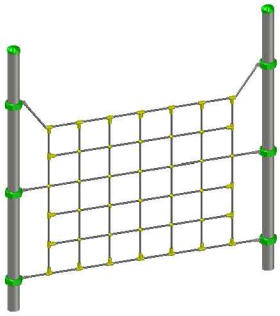

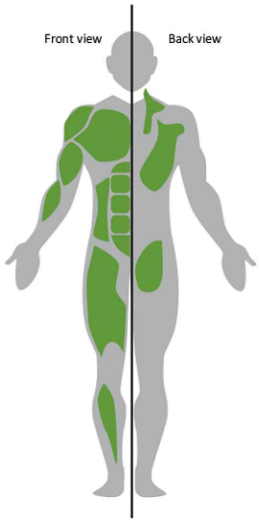

Minimum required safety zone - 27.48 m^2

Length:	2 500 mm
Width:	0 149 mm
Height:	2 700 mm
Safety Area Length:	7 034 mm
Safety Area Width:	4 534 mm
Safety Area:	27.48 m^2

2 users

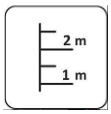

Critical height of fall
H = 2.00 m

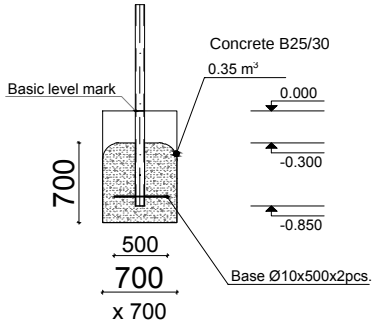

The calistehnic facility is intended for public outdoor use.

The stainless steel round tubes with plastic clamps as connecting element, offer you a whole body strength training. It allows you to train strength & flexibility of all muscle groups of the body. All equipment is almost rust and maintenance free and tested according to the safety requirements and test procedures of DIN EN 16630.
The equipment of our calisthenics series must be set up and maintained according to the enclosed installation and maintenance instructions.

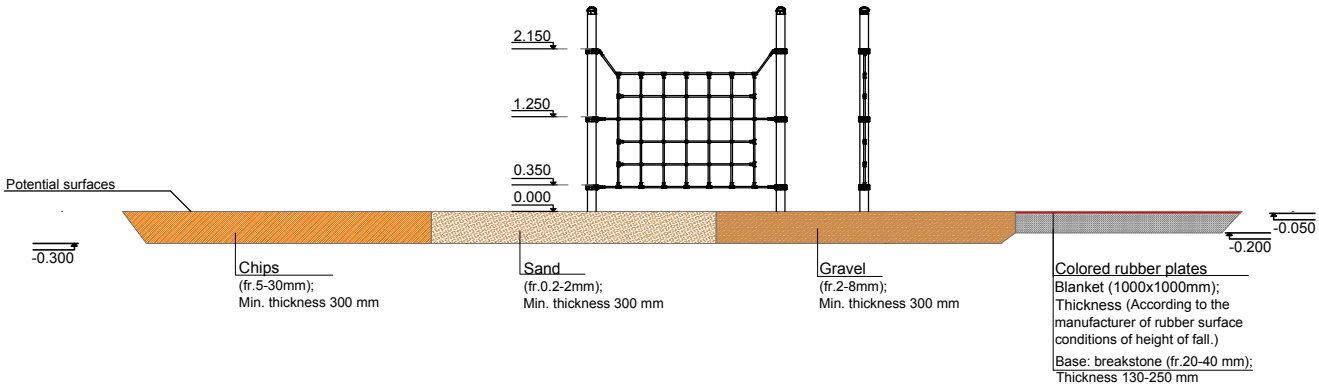

According to Standard DIN EN 16630:2015

Manufactured according: TÜV SÜD